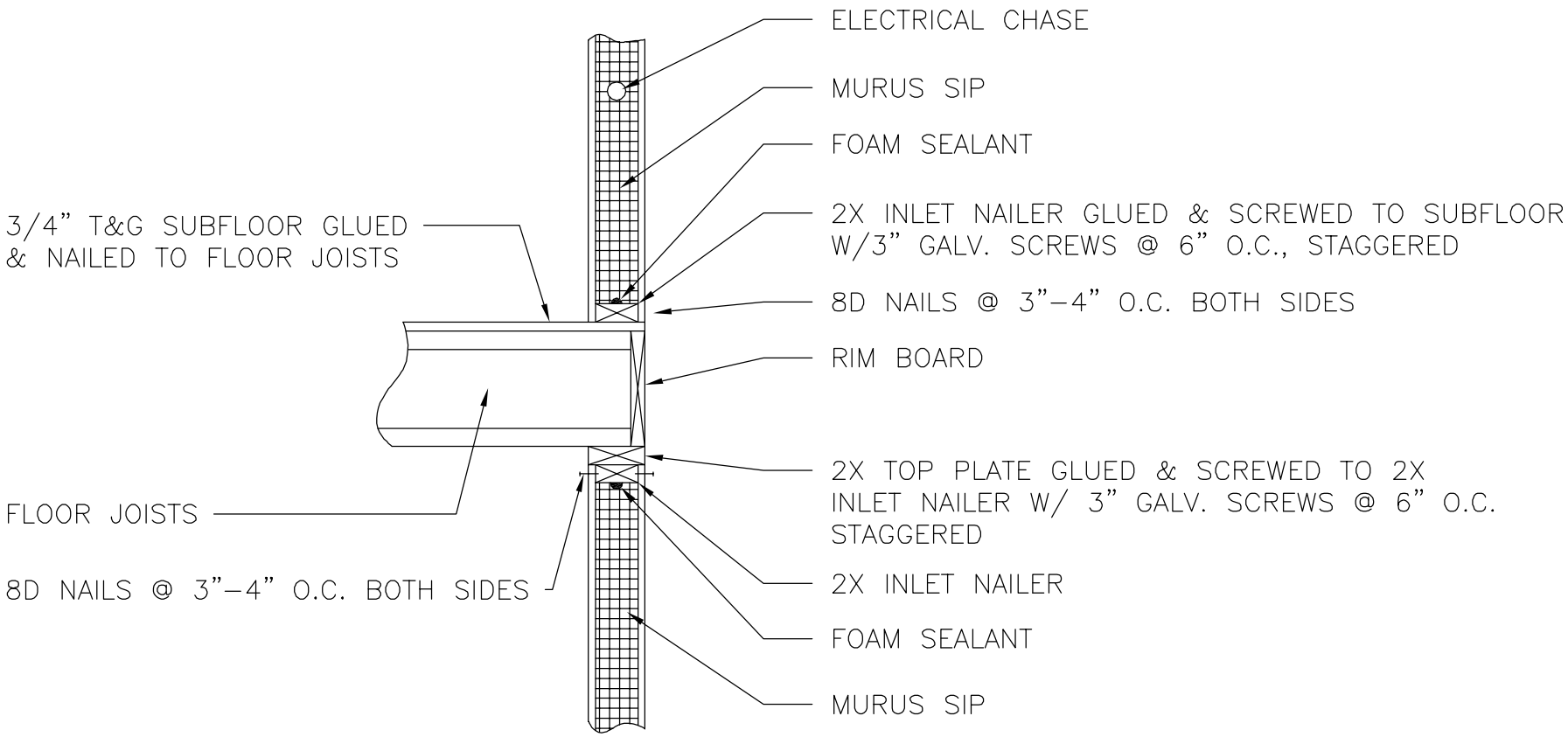

4 PLATFORM FRAMED @ UPPER FLOORS
THE MURUS COMPANY